3.00mm(.118") Wire To Wire And Wire To Board Connector

HRB®
Connector & Terminal

Shenzhen Hongru Connector Co., Ltd

Email:yukyli@hrb-connector.com
Tel: 86-0755 2709 6669
Fax: 86-0755 2709 2392
Skype: haiyuncheng-vivian
Mobile(whatsapp): 86-186 8112 3590
Website: http://www.hrb-connector.com

SPECIFICATIONS:

- Current Rating:AWG#20~24:5A AC,DC AWG#26 3A AC,DC
  AWG #28 2A AC,DC AWG#30 1A AC,DC
- Voltage Rating:250V AC,DC
- Contact Resistance:10mΩ max.
- Withstanding Voltage:1500V AC/minute

Terminal

- Wire Size:AWG#30~#20
- Material:Phosphor bronze
- Finish:Tin Plated
- Thickness:0.20mm
- Qty/Reel:10000pcs
- Terminal In Housing Retention Force
  Requirement:2.5kg (Min.)

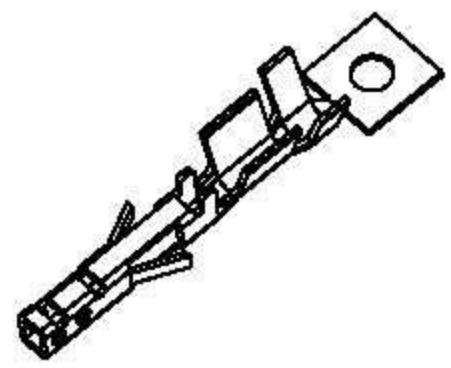

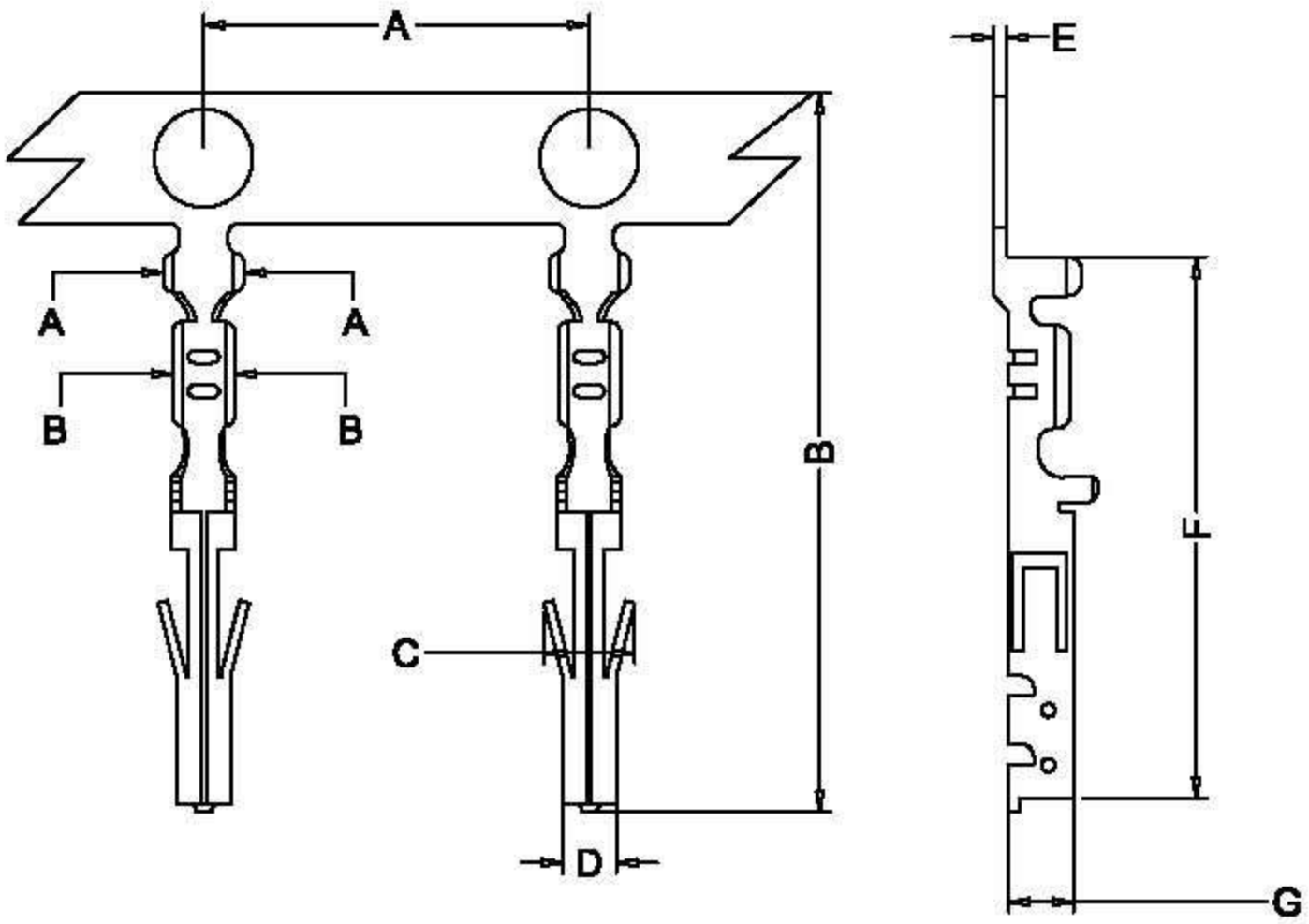

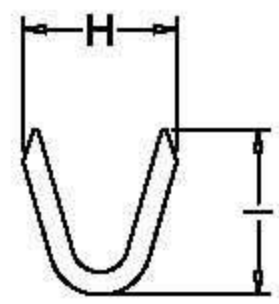

SECTION:A-A

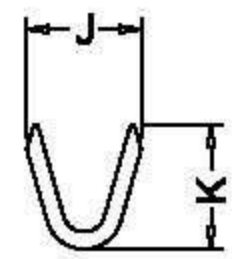

SECTION:B-B

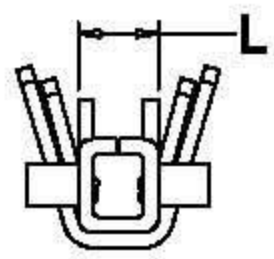

Ordering Information And Dimensions

Part NO.	A	B	C	D	E	F	G	H	I	J	K	L	Applicable wire	Plated
T3025PS-2	6.40	14.90	2.46	1.10	0.20	11.20	1.30	2.60	2.40	2.00	2.10	1.15	AWG#20~24	Tin-plated
T3025PS-2B	6.40	15.00	2.07	1.10	0.20	11.15	1.28	2.00	1.90	1.54	1.20	1.15	AWG#26~30	Tin-plated
T3025PS-2SB	6.40	13.80	2.46	1.10	0.20	10.20	1.30	2.00	2.00	1.55	1.47	1.15	AWG#26~30	Tin-plated
T3025PS-00	6.40	14.90	2.46	1.10	0.20	11.20	1.30	2.60	2.40	2.00	2.10	1.15	AWG#20~24	Gold-plated
T3025PS-00B	6.40	15.00	2.07	1.10	0.20	11.15	1.28	2.00	1.90	1.54	1.20	1.15	AWG#26~30	Gold-plated

ISO 9001 UKAS

E304945

E322751

SGS